Rev	Date	Sign/Appr	Description
1	050614	KN/KN	Typical installation procedure added
2	050622	KN/KN	Text of installation procedure improved

GROUP A/C 3-DIRECTIONAL BUMPER MODULE

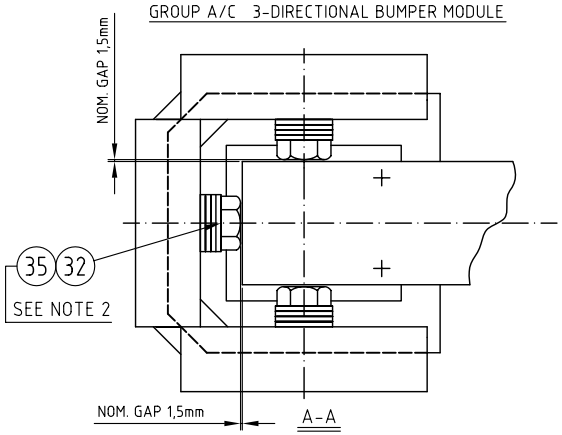

TYPICAL INSTALLATION PROCEDURE

Text below also refers to drawing 3-8223, which should be read together with this drawing.

1. Weld top plates(15,16) to load carrier.
2. Assemble load cells with bottom plates(10, 11) and put in approximate positionon on foundation plates and insert loading pins(13).
3. Lower load carrier onto load cells and adjust to desired position.
4. To acieve desired gaps at the end bumpers shown in figures 2, 3 and 4, e.g. 1.5+1.5 mm, insert a 3 mm steel strip in the gap at one of the cells and then push both cells in contact with the bumpers. Same principle can be used to set all gaps in a scale acc. to figure 1.
Positions of free sliding modules are not chritical and they need only be approximately centered.
5. Weld the base plates to the foundation plates. Make sure grounding is made on the foundation side, so that no welding current flows through the load cells.
6. Final position of load carrier, as well as size of bumper gaps, can be fine adjusted by rearranging the washers(35)

BUMPER ARRANGEMENTS

DRAWING SYMBOL:

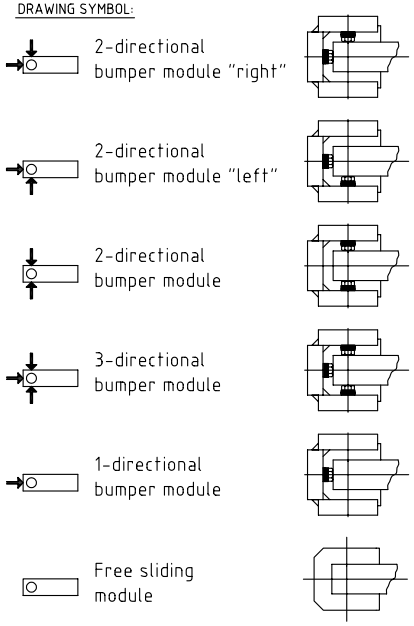

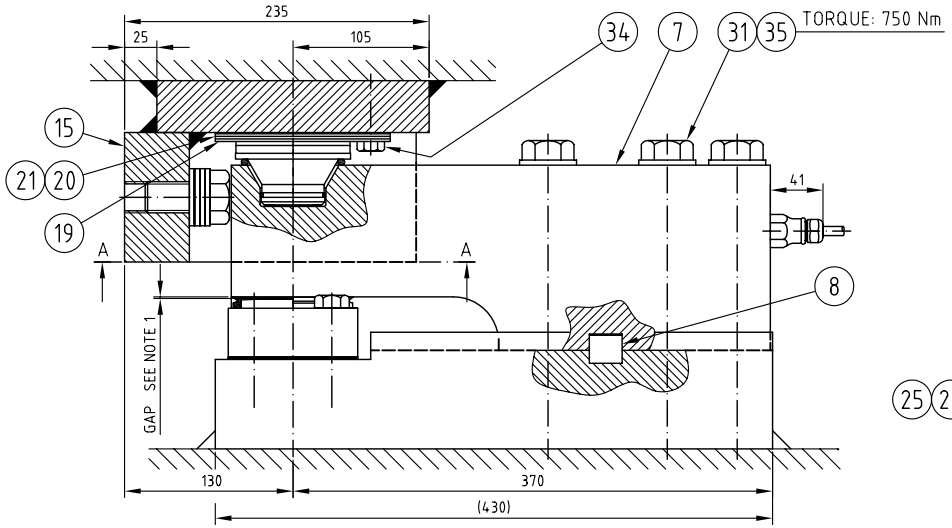

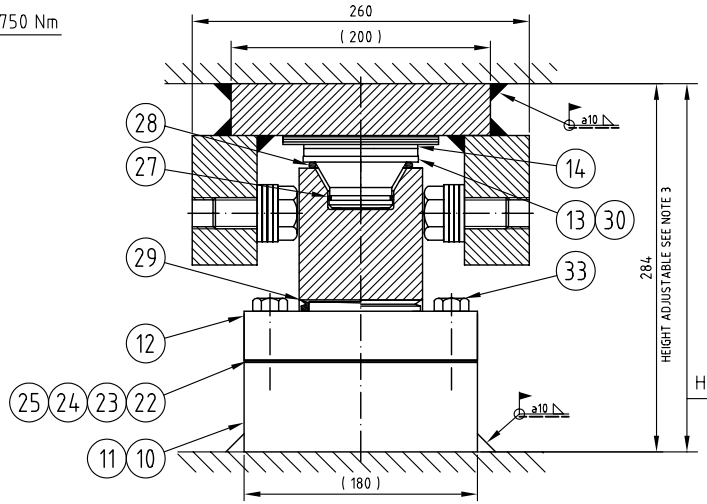

Horizontal within 0.4/100

GROUP B/D FREE SLIDING MODULE

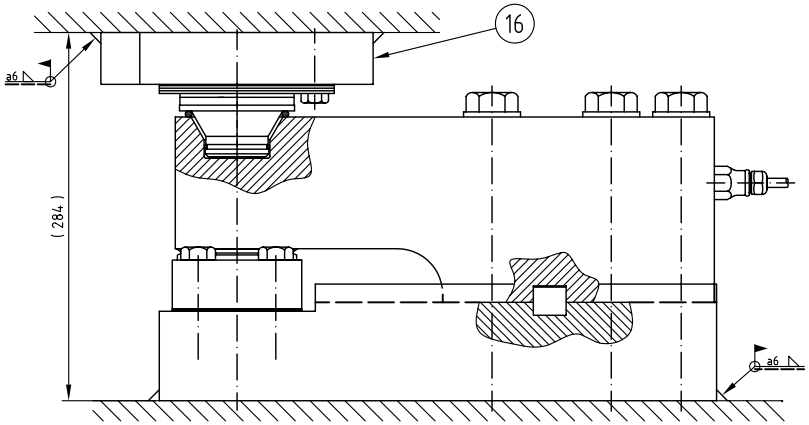

NOTE 1: GAP TO BE SET AT INSTALLATION TO ACTUAL MAX DEFLECTION +30%, USING SHIMS, ITEMS 22-25. DEFLECTION AT NOMINAL LOAD, 100klb, IS 1.5 mm.

NOTE 2: ITEMS 32 AND 35 CAN BE REARRANGED TO ACHIEVE ABOVE LISTED MODULES, AND TO SET GAPS.

REGARDING ORIENTATION OF WEIGH MODULES IN SCALES OF VARIOUS SHAPES, SEE DRAWING 3-8223

NOTE 3: SPACERS ITEMS 20 AND 21, TOTALLY 5 mm, CAN BE REMOVED/ADDED TO ADJUST HEIGHT.

PARTS LIST 4-8220-A/B/C/D

Ref. nr U-1462

Qty / Group	Item	Description	Material/Drg No	Remarks
D C B A				

Drawn KN, Checked PN, Appr KN, Date 04-03-31, Scale 12

WEIGH MODULE TYPE 52-01HD
FOR LOAD CELL TYPE SB2-100klb
ASSEMBLY / OUTLINE DRAWING

Tolerances, unless otherwise specified, acc. to ISO 2768 medium. Hole tol. acc. to ISO tol. H12.

FLINTEC

Drawing No. 1-8221 Sheet

Rev. No. 2

This document must not be copied without our written permission, and the contents thereof must not be imparted to a third party nor be used for any unauthorised purpose. Contravention will be prosecuted.